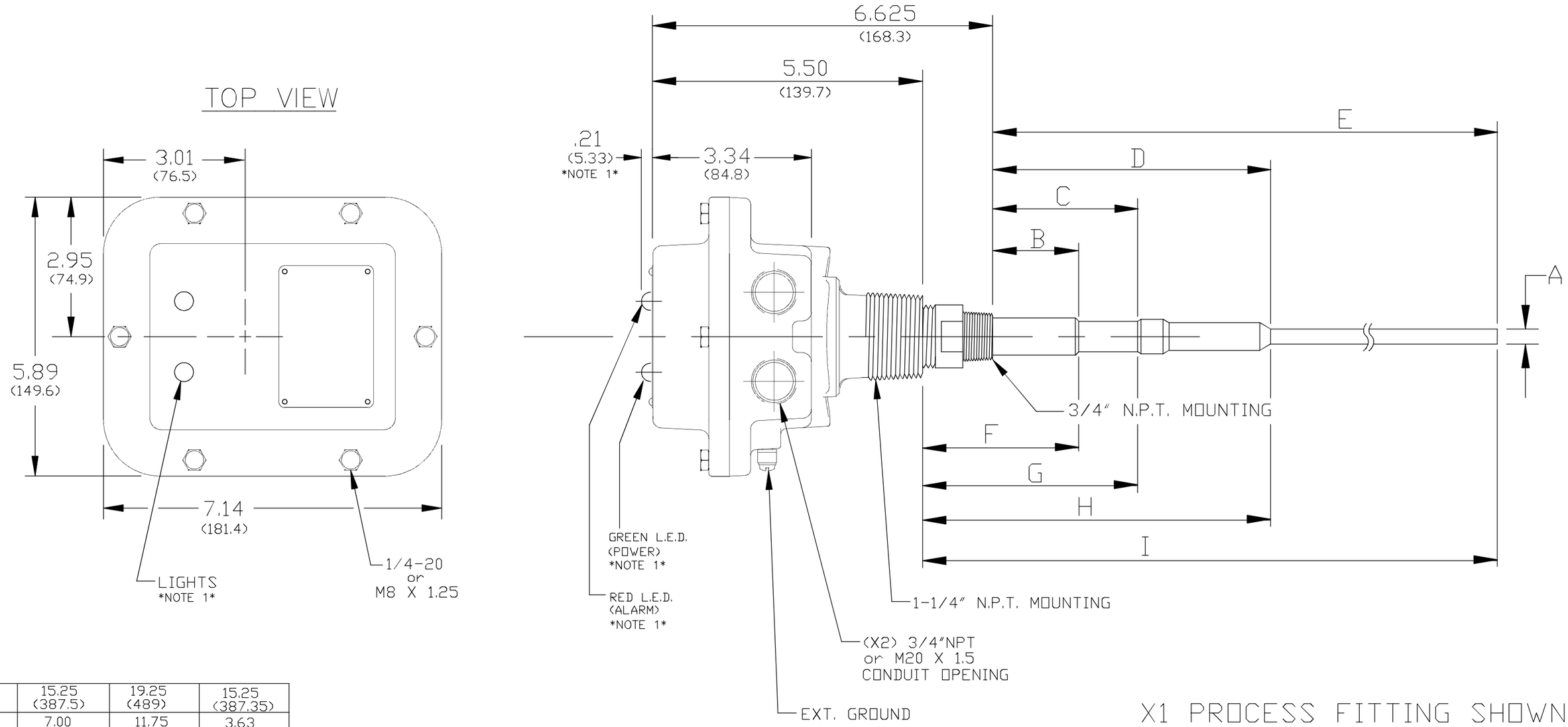

I	15.25 (387.5)	19.25 (489)	15.25 (387.35)
H	7.00 (178)	11.75 (298.5)	3.63 (92.2)
G	4.50 (145)	10.00 (254)	3.25 (82.55)
F	3.38 (86)	8.5 (216)	2.75 (69.85)
E	14.25 (362)	18.25 (463.5)	14.25 (362)
D	6.00 (152.5)	10.75 (273)	2.63 (66.8)
C	3.50 (89)	9.00 (228.5)	2.25 (57.2)
B	2.38 (60.5)	7.50 (190.5)	1.75 (44.5)
A	.31 DIA. (8)	.38 DIA. (9.5)	.31 DIA. (8)
APPROX DIM'S	STD. & FOODGRADE	H.D.	STUB
PROBE TYPE	0 & 2	5 & 9	4

NOTE
1—ONLY UNITS WITH ADVANCED ELECTRONICS WILL HAVE LIGHTS.
2—FOR HORIZONTAL MOUNTING, CONDUIT OPENINGS MUST FACE DOWNWARDS AND INCLUDE DRIPLOOP.

DO NOT SCALE. DIMENSIONS ARE IN INCHES.
BRACKETED DIMENSIONS ARE IN MILLIMETERS.

A	INIT. RELEASE	13-300	SE 8-13-13	
	REVISIONS	ECN #	DRAWN BY DATE	APP'D BY DATE

venture MEASUREMENT
150 VENTURE BLVD.
SPARTANBURG, SC 29306

TITLE: OUTLINE DWG FOR VRFII STANDARD UNIT

SCALE: NONE

SIZE: B

FILE: VRF285001

REF:

UNSPECIFIED TOLERENCES
DECIMALS: XX ±=.01
XXX ±=.005
ANGLES: ±=1/2°
DEBURR & BREAK EDGES .005
⊕ = CRITITCAL DIM. OR NOTE

MATERIAL: _____

FINISH: _____

PART: VRF285001

SHEET: 1 of 2

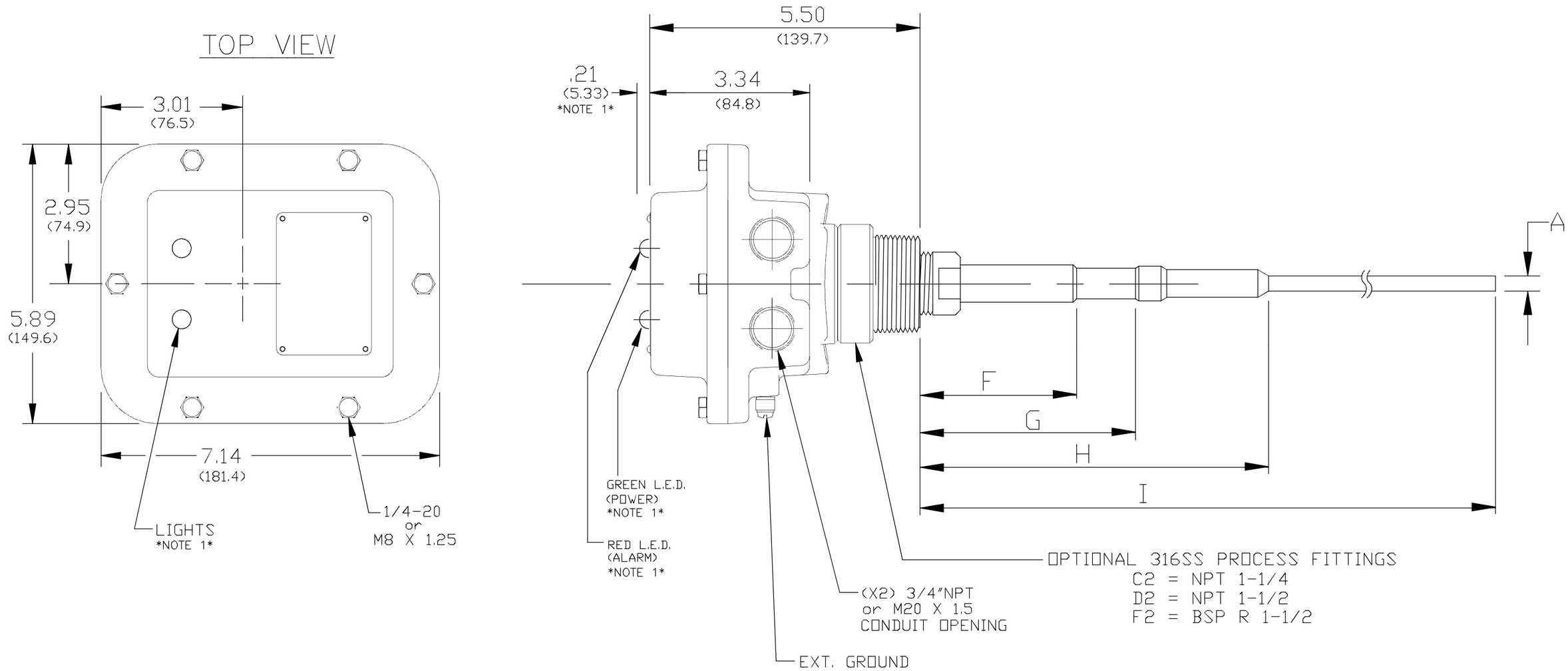

I	15.25 (387.5)	19.25 (489)	15.25 (387.35)
H	7.00 (178)	11.75 (298.5)	3.63 (92.2)
G	4.50 (145)	10.00 (254)	3.25 (82.55)
F	3.38 (86)	8.5 (216)	2.75 (69.85)
A	.31 DIA. (8)	.38 DIA. (9.5)	.31 DIA. (8)
APPROX DIM'S	STD. & FOODGRADE	H.D.	STUB
PROBE TYPE	0 & 2	5 & 9	4

NOTE
1-ONLY UNITS WITH ADVANCED ELECTRONICS WILL HAVE LIGHTS.
2-FOR HORIZONTAL MOUNTING, CONDUIT OPENINGS MUST FACE DOWNWARDS & INCLUDE DRIPLOOP.

DO NOT SCALE. DIMENSIONS ARE IN INCHES.
BRACKETED DIMENSIONS ARE IN MILLIMETERS.

OUTLINE DWG FOR VRFII STANDARD UNIT with C2, D2, & F2 PROCESS FITTINGS

PART: VRF285001

SHEET: 2 of 2 RevA